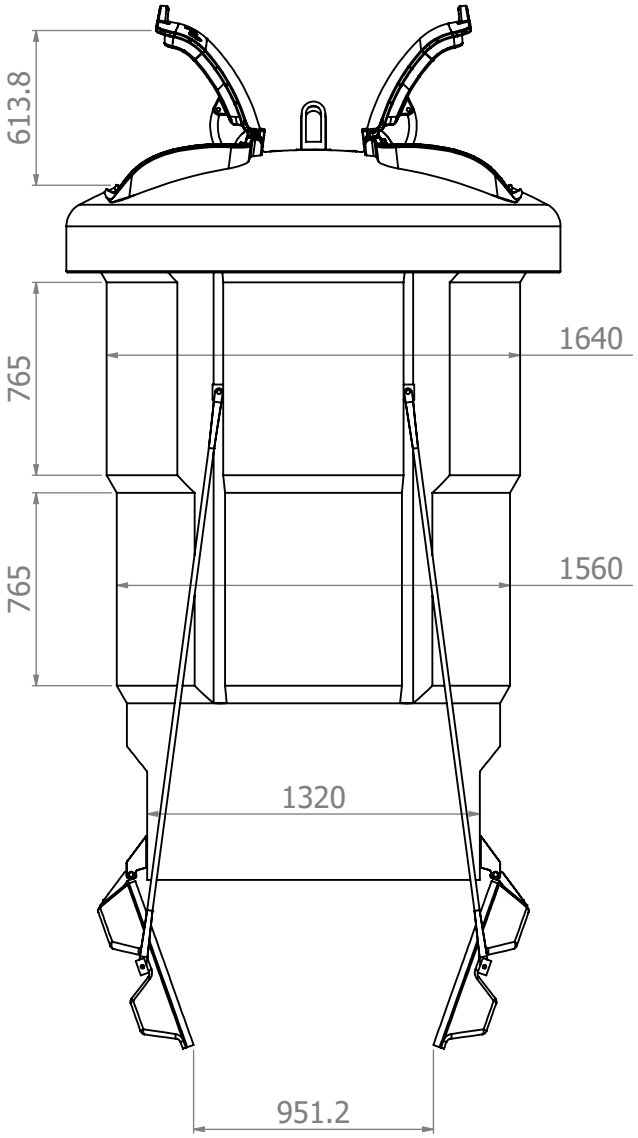

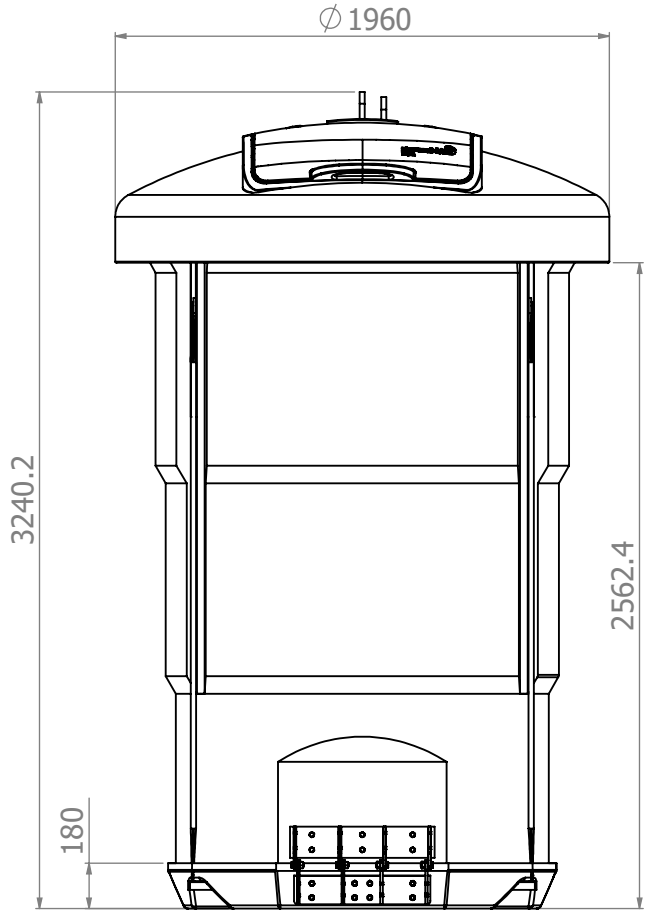

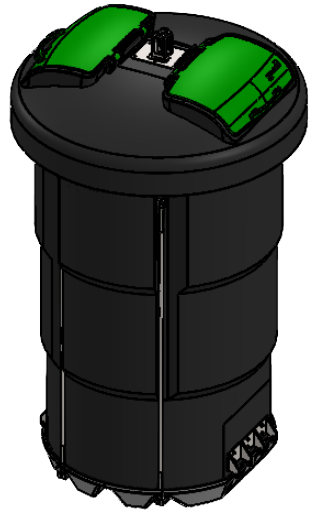

E:\מוצר\קוב 5 פח פלסטיק עגול rev5\

ש.י.א אשקלון בע"מ	Part ID: 400-00-r5		Project Name: ש.י.א אשקלון				QTY. 1
	Drawing ID: 400-00-r5		Item Num:			Drawing Rev:	
Name: / Date:	Description:	Drawing Number:	Work Number: -	Approx Weight: ERROR!:Weight		Sheet: 1 of 1	
Created by: moshe a 18/02/2024	Description Hebrew:	Unless Otherwise Stated: Linear Tol.: ±0.5 Angular Tol.: 0°15' All Dimensions: mm	Projection Method: FIRST ANGLE	A4	Draw. Scale: 1:50	Material: ERROR!:Material	
Drawn by: moshe a							
Checked by:			Configuration: open	File Last Save Date: 22/02/2024		File Created Date: 18/08/2019	
Approved by:							